Remove Watermark Wondershare PDFelement

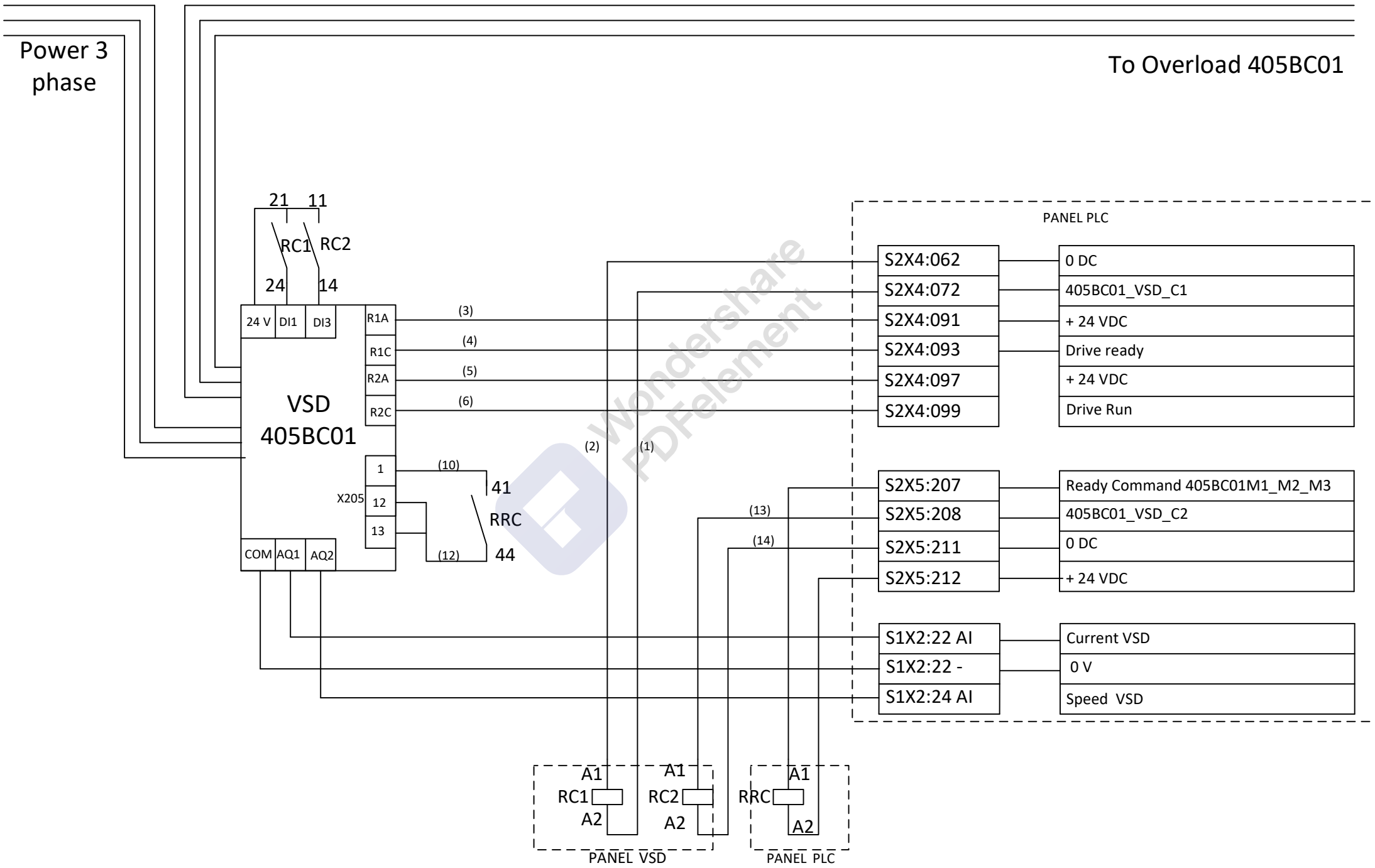

Remove Watermark Wondershare PDFelement

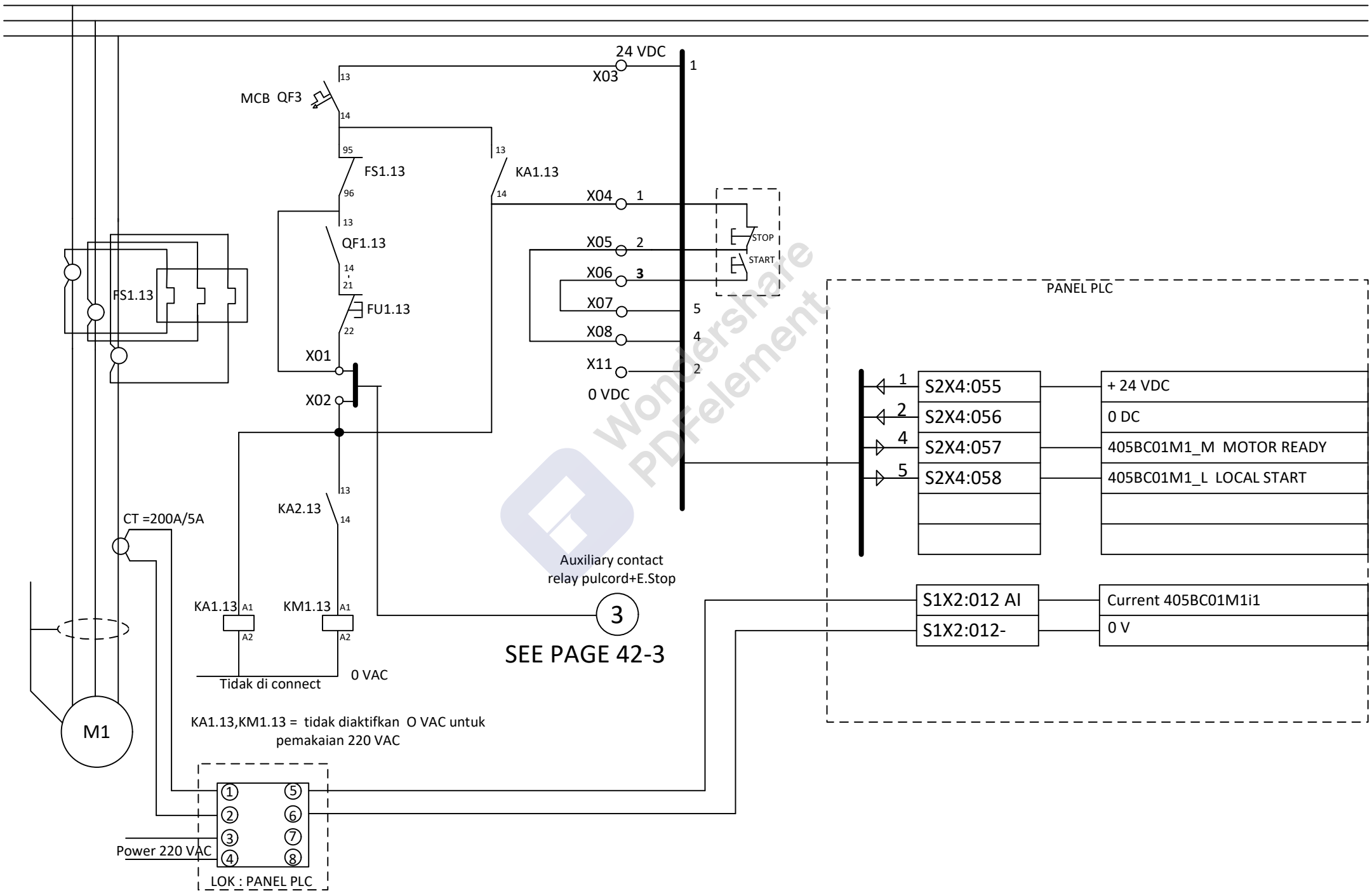

Remove Watermark Wondershare PDFelement

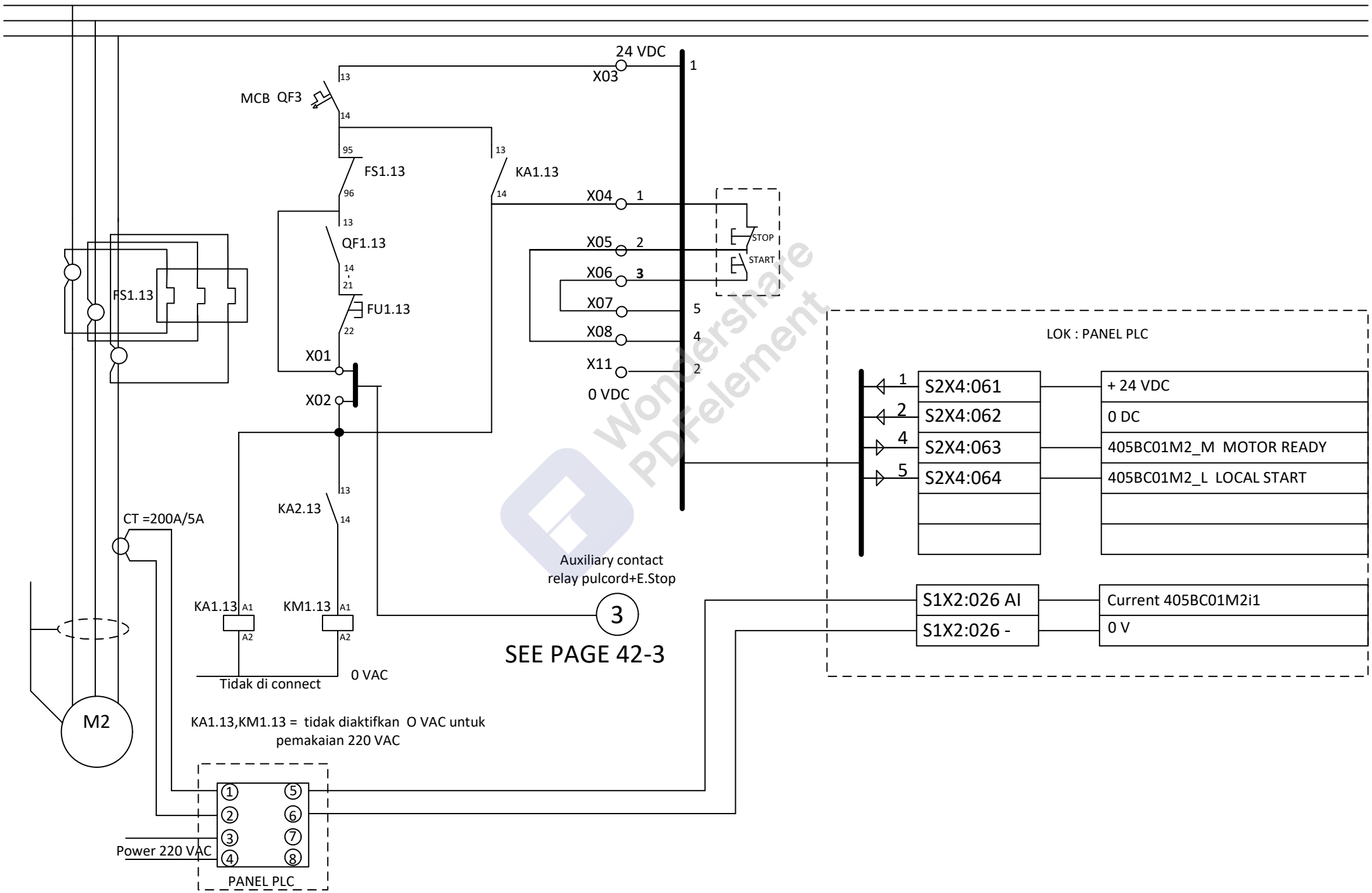

Remove Watermark Wondershare PDFelement

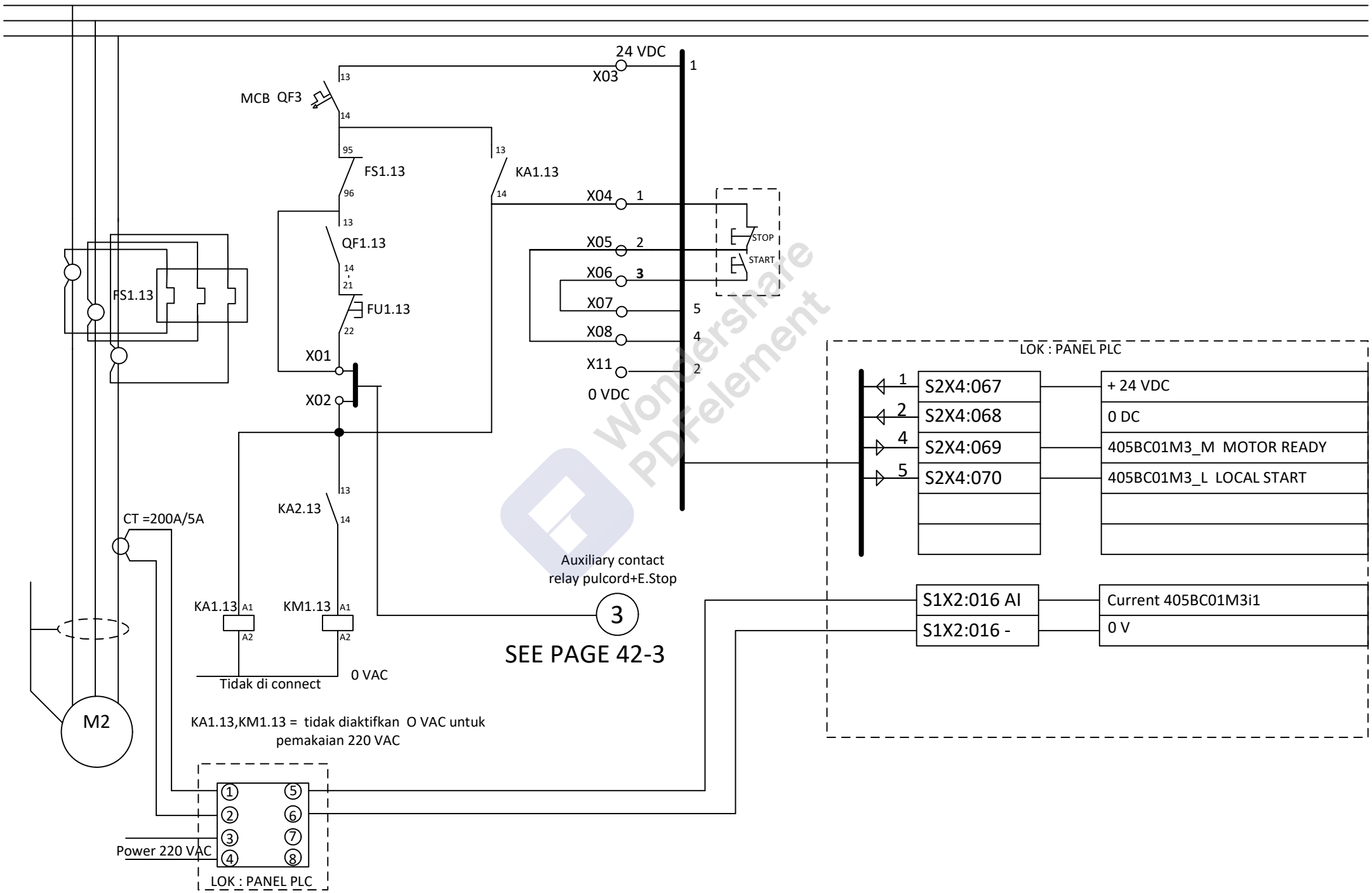

Remove Watermark Wondershare PDFelement

Wondershare PDFelement

Remove Watermark Wondershare PDFelement

Wondershare PDFelement